TECHNICAL DATA SHEET

HYDROCHANNEL ST

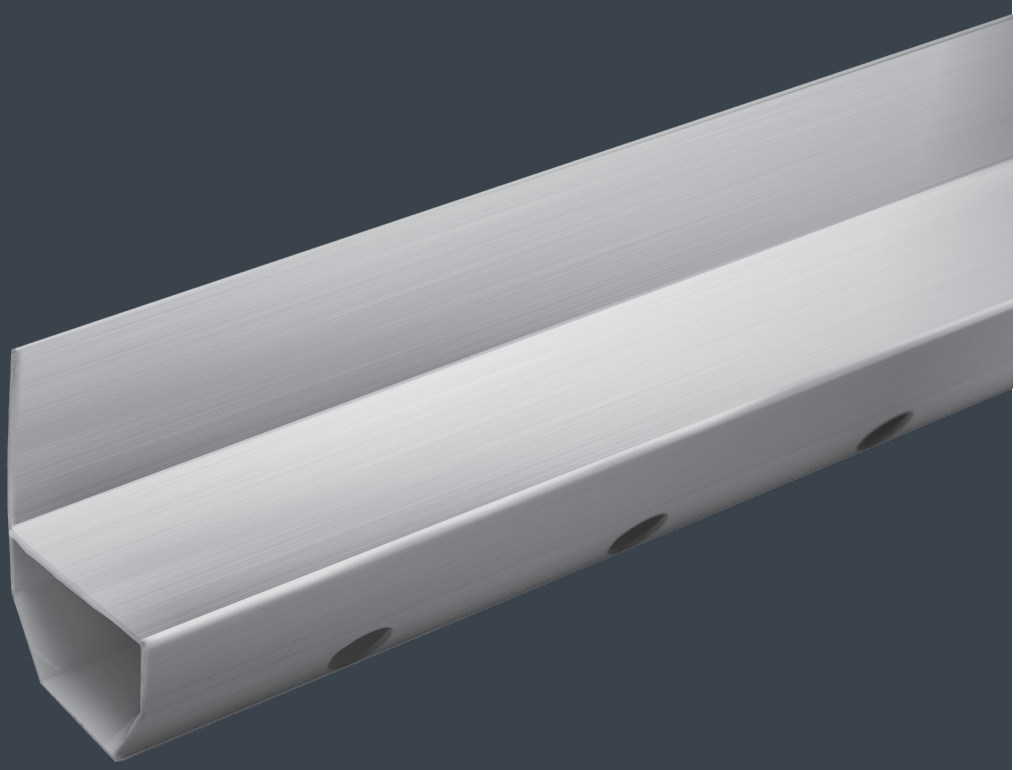

Grade 304 Stainless Steel Drainage Channel

PREMCRETE

HYDROCHANNEL ST

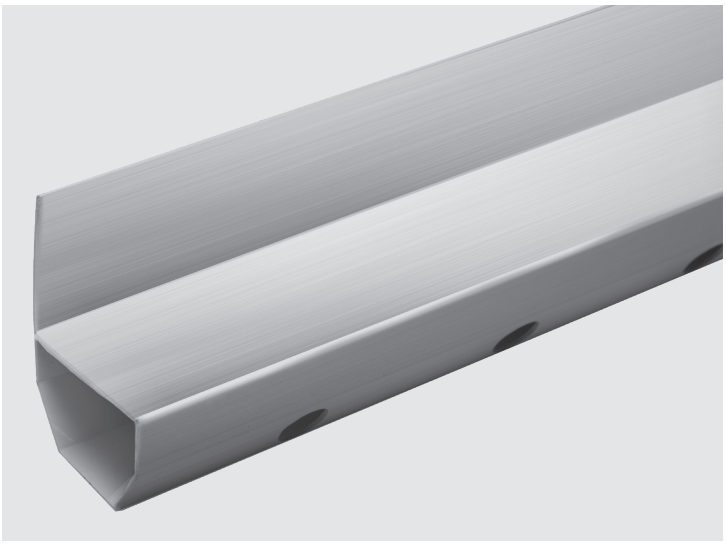

TYPE C
DRAINAGE CHANNEL

WATER RESISTANT

25 YEARS
PRODUCT WARRANTY

DESCRIPTION

HYDROCHANNEL ST is a Grade 304 stainless steel drainage channel designed for the control and collection of water ingress in below-ground waterproofing applications. Installed at the vulnerable wall/floor junction, it collects water behind Premcrete cavity drainage membranes and directs it to a suitable drainage point for gravity discharge or pumped removal. Manufactured from corrosion-resistant Grade 304 stainless steel, HYDROCHANNEL ST provides excellent durability and long-term performance.

USES

Typically used with Premcrete Hydroflow HP cavity drainage membranes for basements, retaining walls, lift pits, service ducts, tunnels and other Type C cavity drainage systems.

ADVANTAGES

- Grade 304 stainless steel
- Corrosion resistant
- Long service life
- High load resistance
- Compatible with Premcrete cavity drainage systems
- Gravity or pumped drainage
- Easy installation

TECHNICAL & PERFORMANCE PROPERTIES

Property	Test Method	Value
Material	N/A	Grade 304 Stainless Steel
Length	N/A	2m
Dimensions	N/A	80mm wide × 50mm deep
Capacity	N/A	3 litres per metre
Inlet Port Size	N/A	19mm

HYDROCHANNEL ST

INSTALLATION PROCEDURE

Application

Form a 130mm × 130mm trough at the wall/floor junction. Install the PREMCRETE HYDROFLOW HP membrane to the wall finishing at least 100mm below floor level. Lay a shallow bed of 20mm clean stone and position HYDROCHANNEL ST with the upstand against the membrane. Butt joint straight lengths, mitre corners where required, seal joints with PREMCRETE BUTYL TAPE, install the outlet and backfill around the channel with 20mm clean stone before completing the floor.

Maintenance

Jet wash the channel through designated jetting ports at least every six months. Inspect and clean associated pumps and sump chambers during routine maintenance.

PACKAGING & COVERAGE

Pack Size

Supplied in 2m lengths.

STORAGE & SHELF LIFE

Store in clean, dry conditions and protect from physical damage prior to installation.

HEALTH & SAFETY

See separate Material Safety Data Sheet. Wear suitable PPE during handling and installation.

.

ANCILLARY PRODUCTS



HYDROFLOW HP8



HYDROFLOW HP20

44 Macadam Way | West Portway | Andover | Hampshire | SP10 3XW
www.premcrete.com | 02380 276166 | sales@premcrete.com

PREMCRETE